THE LG FULL SIZE WASHER AND VENTLESS DRYER COMBINATION

WM3677HW

ELECTRICAL CONNECTION: STANDARD 3 PRONG GROUNDED PLUG, SEPARATE 20-AMP CIRCUIT REQUIRED IN MOST LOCALITIES

VOLTAGE REQUIREMENTS: 120-VOLTS, 60 Hz, 10 AMPS MAXIMUM DRAW

WATER CONNECTION: STANDARD 3/4" HOSE THREAD CONNECTIONS WITH STANDARD 1/2" WATER SUPPLY. WATER PRESSURE SHOULD BE BETWEEN 4.5 AND 145 PSI. OVER 145 PSI REQUIRES INSTALLATION OF A PRESSURE REDUCING DEVICE. COLOR-CODED DRAIN HOSES ARE INCLUDED.

DRAIN REQUIREMENTS: FOR BEST DRAINAGE DRAIN HOSE SHOULD BE INSTALLED FROM 36" TO 60" FROM BOTTOM OF MACHINE. DO NOT INSTALL DRAIN HOSE HIGHER THAN 96" FROM BOTTOM OF MACHINE. DRAIN HOSE MAY BE INSTALLED 2-4" ABOVE THE P-TRAP IN SINK OR DRAIN PIPE BY USING A 3/4" Y-BRANCH TAILPIECE OR A 1 1/2" STANDPIPE DEPENDING ON LOCAL CODES.

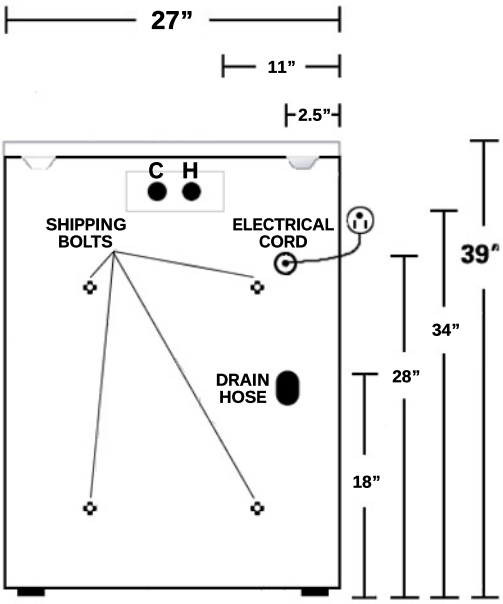

WASTEWATER: 5 GALLONS PER MINUTE DISCHARGE RATE WITH A MAXIMUM 6 GALLONS PER MINUTE DISCHARGE RATE.

LEVELING: MACHINE IS FITTED WITH FOUR ADJUSTABLE LEVELING LEGS AND SHOULD BE INSTALLED ON A WELL SUPPORTED FLOOR. ALLOWABLE SLOPE UNDER ENTIRE MACHINE IS 1". DO NOT INSTALL ON CARPETING OR PADS.

CLEARANCE REQUIREMENTS: IF CONNECTIONS ARE DIRECTLY BEHIND MACHINE ALLOW 1" ON EACH SIDE AND 2" TO REAR. IF CONNECTIONS ARE ON SIDE OF MACHINE ALLOW 2-3" OF CLEARANCE ON SIDES FOR HOSES. SOME INSTALLATIONS MAY REQUIRE UP TO 4" BEHIND MACHINE FOR ADEQUATE VENTILATION.

DIMENSIONS: 27" WIDE x 29 3/4" DEEP x 39" TALL. (50 13/16" DEEP WITH DOOR FULLY OPEN) LEVELING LEGS MAY ADD UP TO 1" TO HEIGHT OF MACHINE.

WEIGHT: 201 LBS.

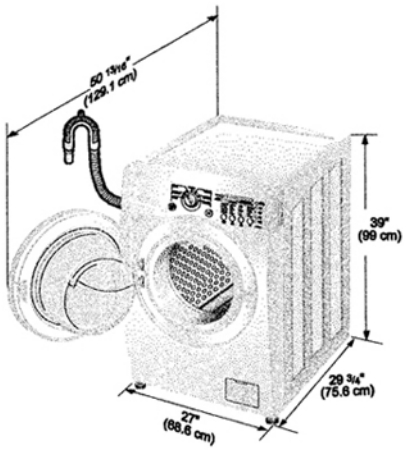

WARNING: ALL FOUR SHIPPING BOLTS MUST BE REMOVED PRIOR TO OPERATION OR SERIOUS DAMAGE MAY OCCUR.

DRAIN HOSE LENGTH - 6 ft
OUTER DIAMETER - 1 1/8"
INNER DIAMETER - 13/16"

WATER SUPPLY HOSE LENGTH - 4 1/2 ft

POWER CORD LENGTH—7 ft

FOR MORE INFORMATION OR HELP PLEASE SEE THE MACHINE'S OWNER'S MANUAL, VISIT US AT **www.OasisAppliance.com**, OR CALL US AT **888.876.8002** (TOLL FREE)

© 2006 OASIS APPLIANCE CORP.

Oasis Appliance Corp.